5.ASSEMBLY PROCESS OF CP(6CH) MAIN ROTOR BLADE 6通旋翼头组装

Frame connector set nstallation 中联组件组装

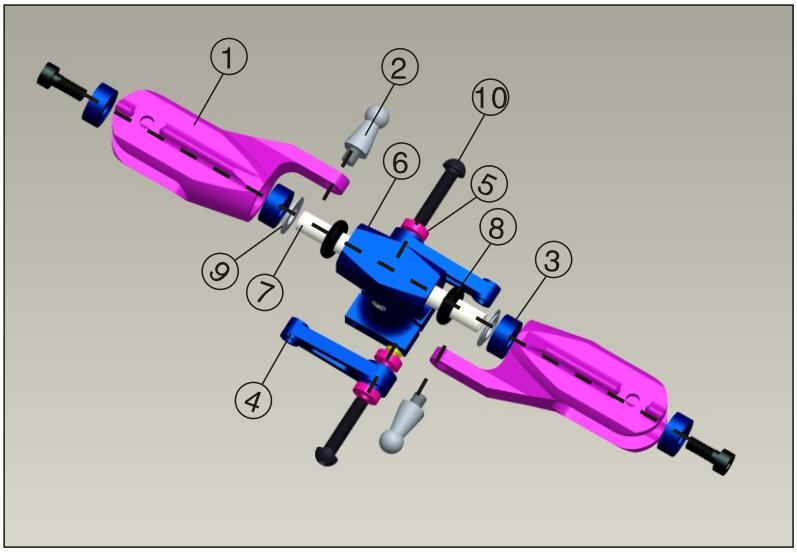

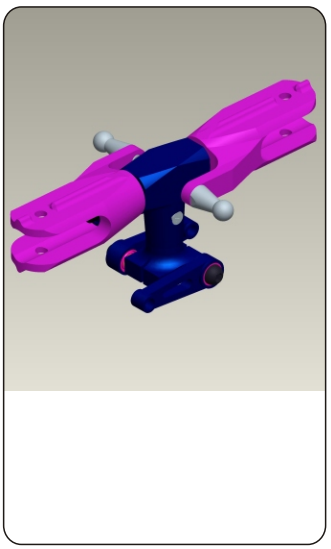

NO. 编号	NAME 名 称	QUANTITY 数 量	SPECIFICATION 规 格(mm)
1	Main blade 大桨夹	2	
2	Steel ball 钢球头	2	
3	Bearing 轴承	4	Φ6x3x2.5
4	Phase swag arm 相位摆臂	2	
5	Bearing 轴承	4	1.5x4x1.2
6	Mid-connector 中联	1	
7	Pitch axis 横轴	1	
8	Rubber ring 橡胶圈	2	
9	Pitch axis spacer 横轴垫片	2	
10	Screw 螺丝	2	M1.4x10

Platic main rotor blade installation 主旋翼组装

Explosion picture of swashplate
十字盘分解图

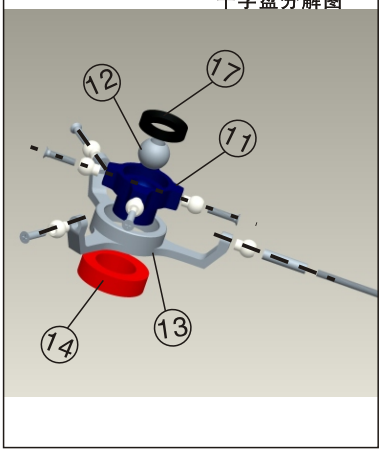

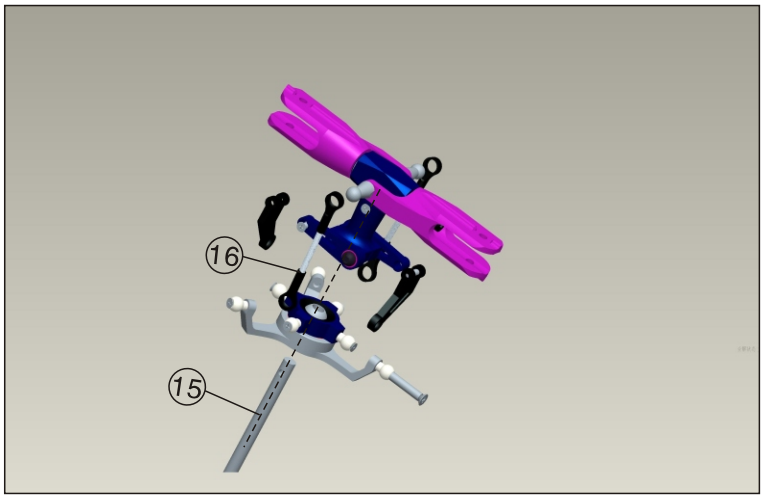

NO. 编号	NAME 名 称	QUANTITY 数 量	SPECIFICATION 规 格(mm)
11	Upper swashplate 十字上盘	1	
12	Cross round ball 十字圆球	1	
13	Lower swashplate 十字盘下盘	1	
14	Bearing 轴承	1	Φ13x8x3.5
15	Main shaft 主轴	1	
16	Push rod 拉杆	2	
17	Upper cover swashplate 十字盘上盖	1	

6.ASSEMBLY PROCESS OF FUSELAGE 机身组装过程

First,assemble the components below into an integrated part.then install it into the corresponding positions of the airframe side shelf (shown as picture);
Both sides of the carbon fiber airframe side shelf are identical, can be used on either side of the fuselage.

先把下面的零部件组装成整体配件，再安装到机身侧板对应位置(如图所指位置);
机身碳纤侧板不分内外侧,左右2边可以互换。

Motor set installation
马达组件组装

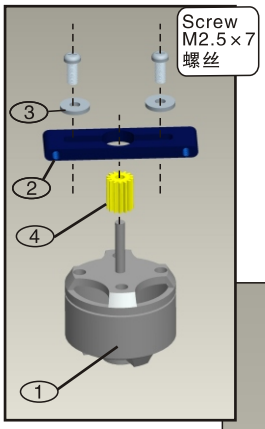

Main shaft mount installation
主轴固定座组装

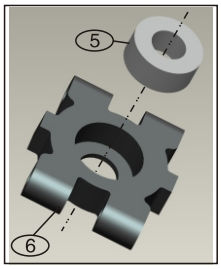

Guide pulley set installation
导带轮组件组装

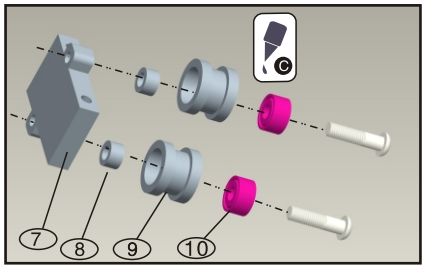

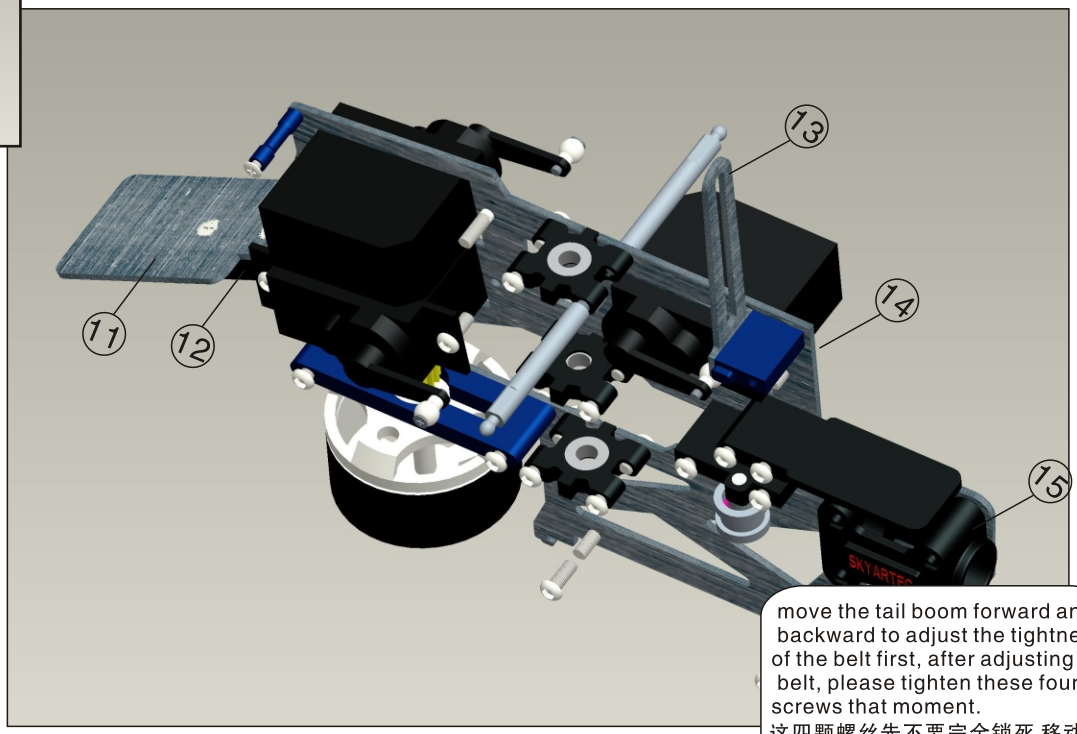

move the tail boom forward and backward to adjust the tightness of the belt first, after adjusting the belt, please tighten these four screws that moment.
这四颗螺丝先不要完全锁死,移动尾管，待调节好皮带松紧度后,再锁紧

NO. 编号	NAME 名 称		QUANTITY 数 量	SPECIFICATION 规 格(mm)
1	Motor	马达	1	
2	Motor mount	马达座	1	
3	Spacer	垫片	2	
4	Copper pinion gear	铜齿	1	
5	Bearing	轴承	3	Φ3x6x2.5
6	Main shaft mount	主轴固定座	3	
7	Guide pulley mount	导带轮座	1	
8	Washer	垫圈	2	
9	Guide pulley	导带轮	2	
10	Bearing	轴承	2	Φ5x2x2.5
11	Battery board	电池板	1	
12	Battery holder	电池固定座	1	
13	Anti dotation bracket	十字盘导板	1	
14	Airframe side shelf	机身侧板	2	
15	Tail boom holder	尾管固定座	1	

Joint the airframe side shelf and landing gear together 机身侧板与脚架连接

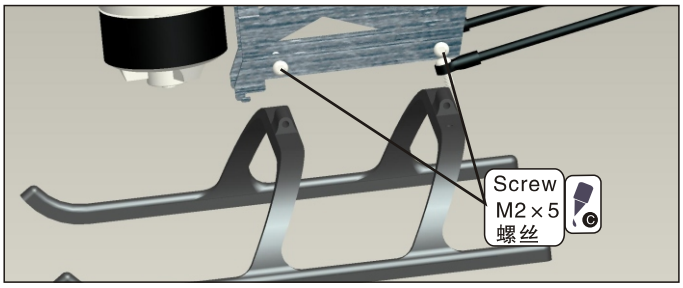

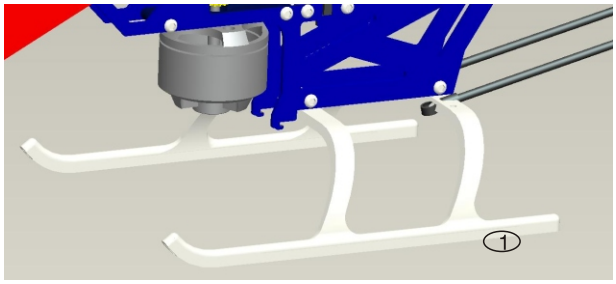

主齿盘和电子设备安装
Main gear and Electronic equipment install

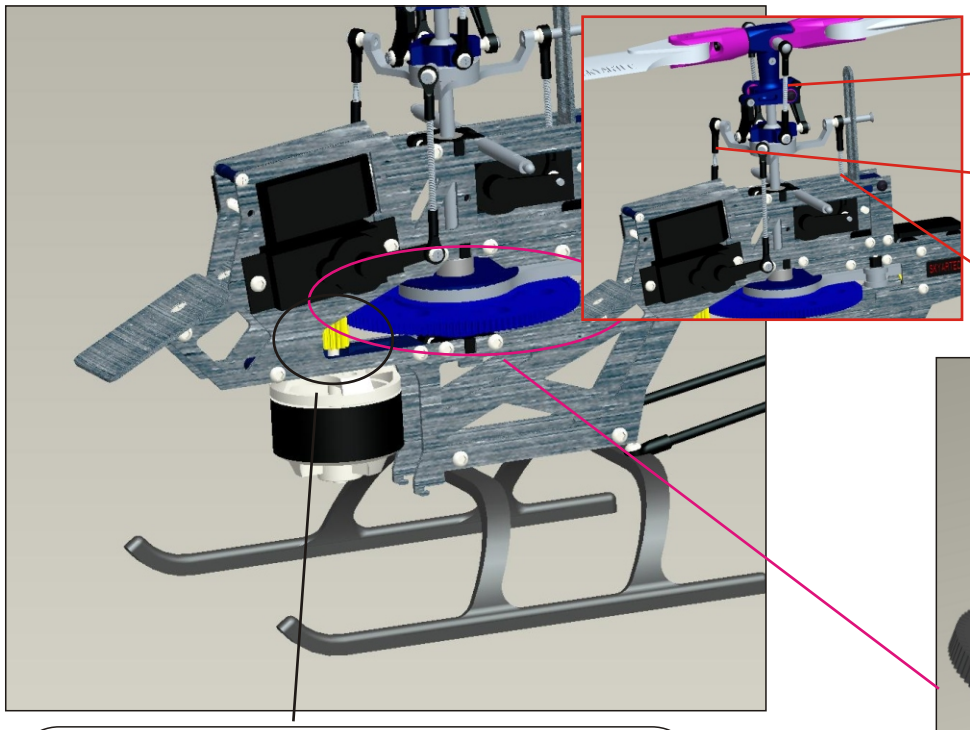

Servo pull rod size:

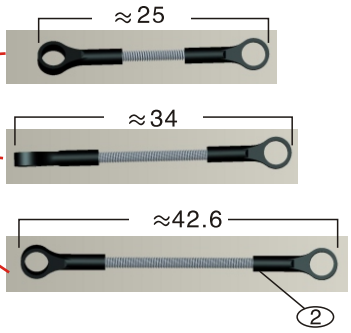

The distance between two gears should be around 0.1~0.3mm. Debug way:rotate the rotor head by hand(shown as picture),when you see the motor rotating with it too, then it proves that what your done is correct.

两齿之间的距离约:0.1~0.3之间;
测试方法:用手(如右图方向)旋转旋翼头,马达也能轻易的跟着旋转为好。

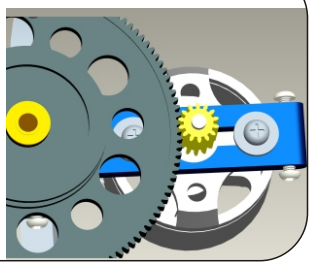

When assembling the one way bearing, the side that has lettering shoould face downwards
单向轴承组装时,有字的面朝下

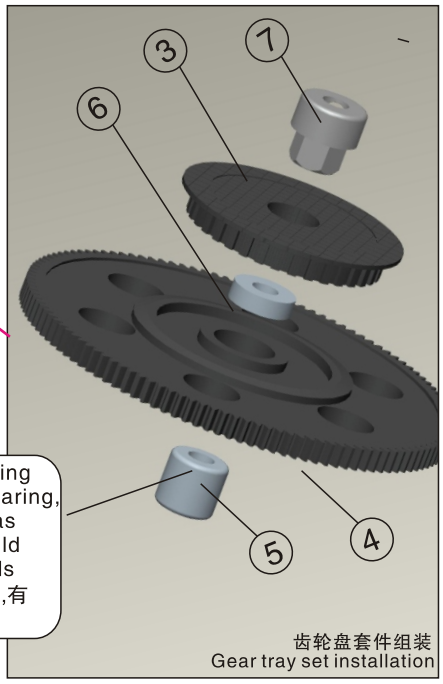

齿轮盘套件组装
Gear tray set installation

NO. 编号	NAME	名 称	QUANTITY 数 量	SPECIFICATION 规 格(mm)
1	Landing gear	起落架	1	
2	Servo pull rod	舵机拉杆	3	
3	Belt pulley	皮带轮	1	
4	Main gear	主齿盘	1	
5	One way bearing	单向轴承	1	
6	Bearing	轴承		3x7x2
7	Belt pulley locating ring	皮带轮定位圈		

The assembled fuselage 已经组装好机身

Move the tail boom forward and backward to adjust belt pulley ternion.
移动尾管可以调节皮带轮的松紧度

Align the belt pulley and guide pulley to the same horizontal line.
皮带轮跟导带轮是在同一条水平线上;

After assembling the airframe completely,please check the whole of the airframethat whether they are balance?Make ensure that it doesn't appear the twisty phenomenom;Also please check that whether the all parts'screws have been glued and lock tightly enough? Also does the guide pulley move freely?

机身组装好后,要检查整个机身是否平衡,不能出现歪扭的现象,各个部件的螺丝涂螺丝胶没有,锁紧了没有,导带轮滑动是否顺畅。

皮带运行示意图
Schematic diagram for belt pulley running

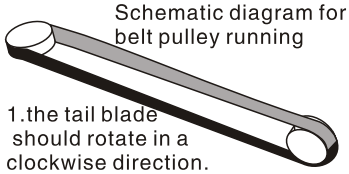

1.the tail blade should rotate in a clockwise direction.
After assembling the belt should be twisted at exactly 90 degrees.
2. belt tightness :
After assembling the tail boom,we have a suggestion that stretch the belt backward slightly,to avoid the friction of the belt,or skidding,when the viabration happens.

1, 组装时确认皮带顺转90度
2, 皮带紧度:建议尾管组装后,皮带请稍向后移一点,避免震动时，皮带摩擦或转动打滑。

7.ASSEMBLY PROCESS OF PLASTIC TAIL ROTOR BLADE 塑胶尾旋翼组装

Plastic tail rotor holder set installation 塑胶尾旋翼夹座组组装

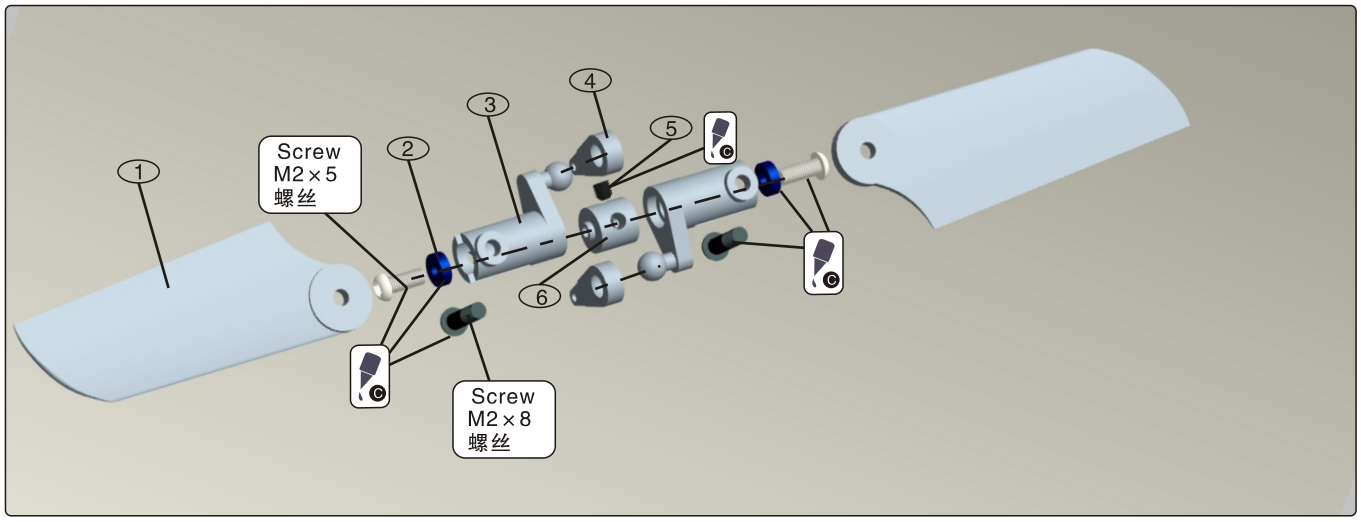

Plastic tail rotor control arm set installation 塑胶尾旋翼控制臂组组装

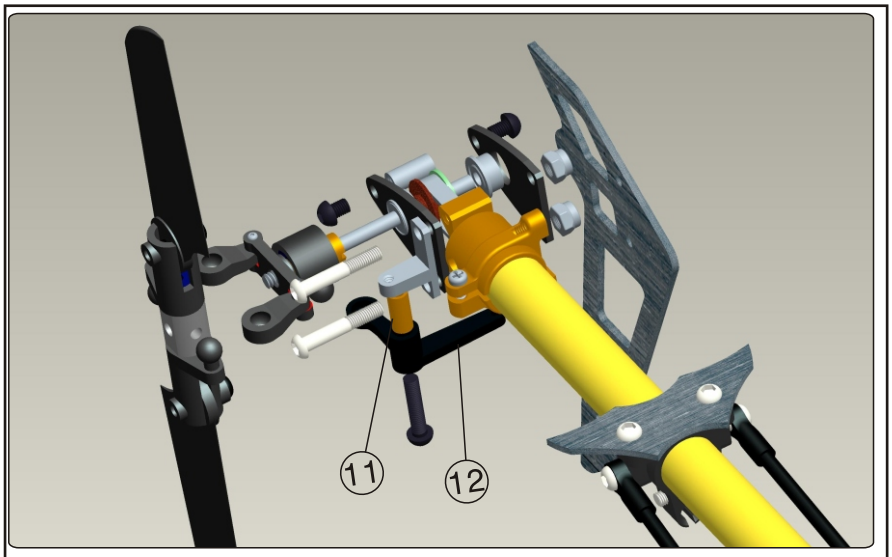

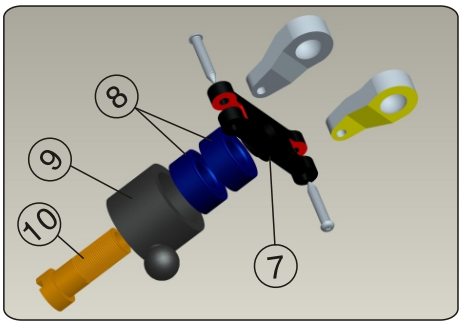

Loosen 1/2circle,after locking up the connector,to make sure it can run freely.
活动连接处，螺丝锁紧固定后，需要放松1/2圈，使连接头可以自由转动。

NO. 编号	NAME 名 称		QUANTITY 数 量	SPECIFICATION 规 格(mm)
1	Tail blade	尾桨	2	
2	Bearing	轴承	2	Φ5x2x2.5
3	Tail rotor holder	尾桨夹	2	
4	Tail pitch shifter arm	尾变距摆臂	2	
5	M2 headless screw	M2 无头螺丝	1	
6	Tail rotor holder stator	尾桨夹柱	1	
7	Pitch shifter block	变距块	1	
8	Bearing	轴承	2	Φ6x3x2.5
9	Tail pitch shifter push–pull hoop	尾变距推拉环	1	
10	Pitch shifter slide bush	变距滑套	1	
11	Copper bush	铜套	1	
12	Tail pitch shifter fork	尾变距波叉	1	

Plastic tail gear box set installation 塑胶尾波箱组组装

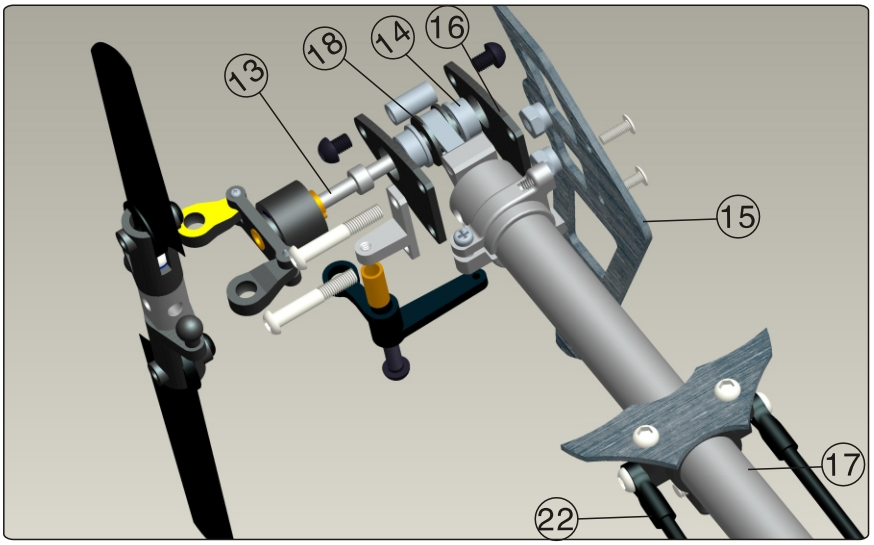

View of the completed tail boom and tail rotor assembly 尾管和尾翼组装完成图

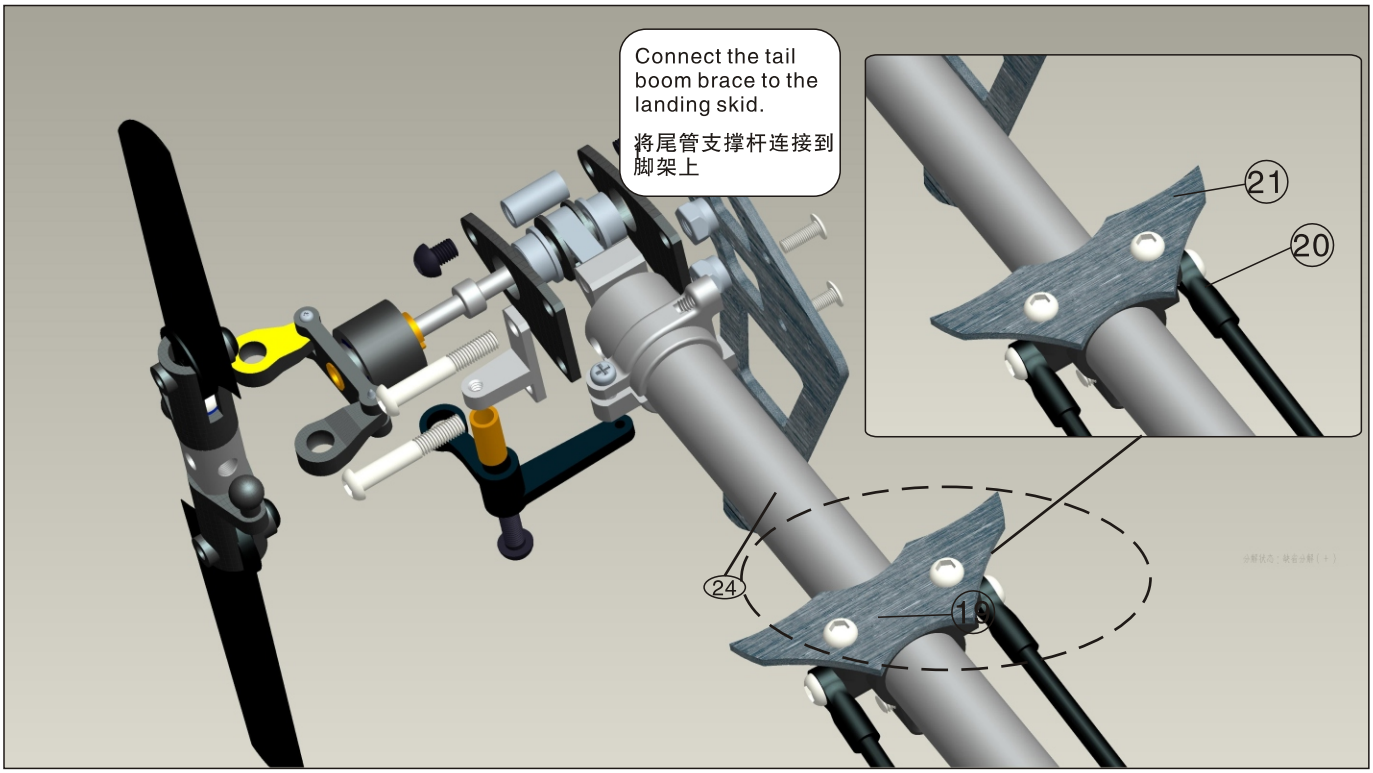

NO. 编号	NAME 名 称		QUANTITY 数 量	SPECIFICATION 规 格(mm)
13	Tail shaft	尾轴	1	
14	Bearing	轴承	2	Φ5x2x2.5
15	Vertical fin	垂直尾翼	1	
16	Tail gear box plate(Left)	尾波箱侧板	2	
17	Tail boom	尾管	1	
18	Tail gear	尾齿轮	1	
19	Tail boom brace	尾管支撑杆	2	
20	Stabilizer mount	平尾座	1	
21	Stabilizer	水平尾翼	1	
22	Tail servo push rod	尾舵拉杆	1	